Stuffing Chart

	IO Levels	
	5V	3.3V
R3	Zero Ohm	NS
R4	NS	Zero Ohm

WARNING: Never stuff both R3 and R4!
It will short both the +5V and 3.3V supplies together and will damage the board and connected equipment.

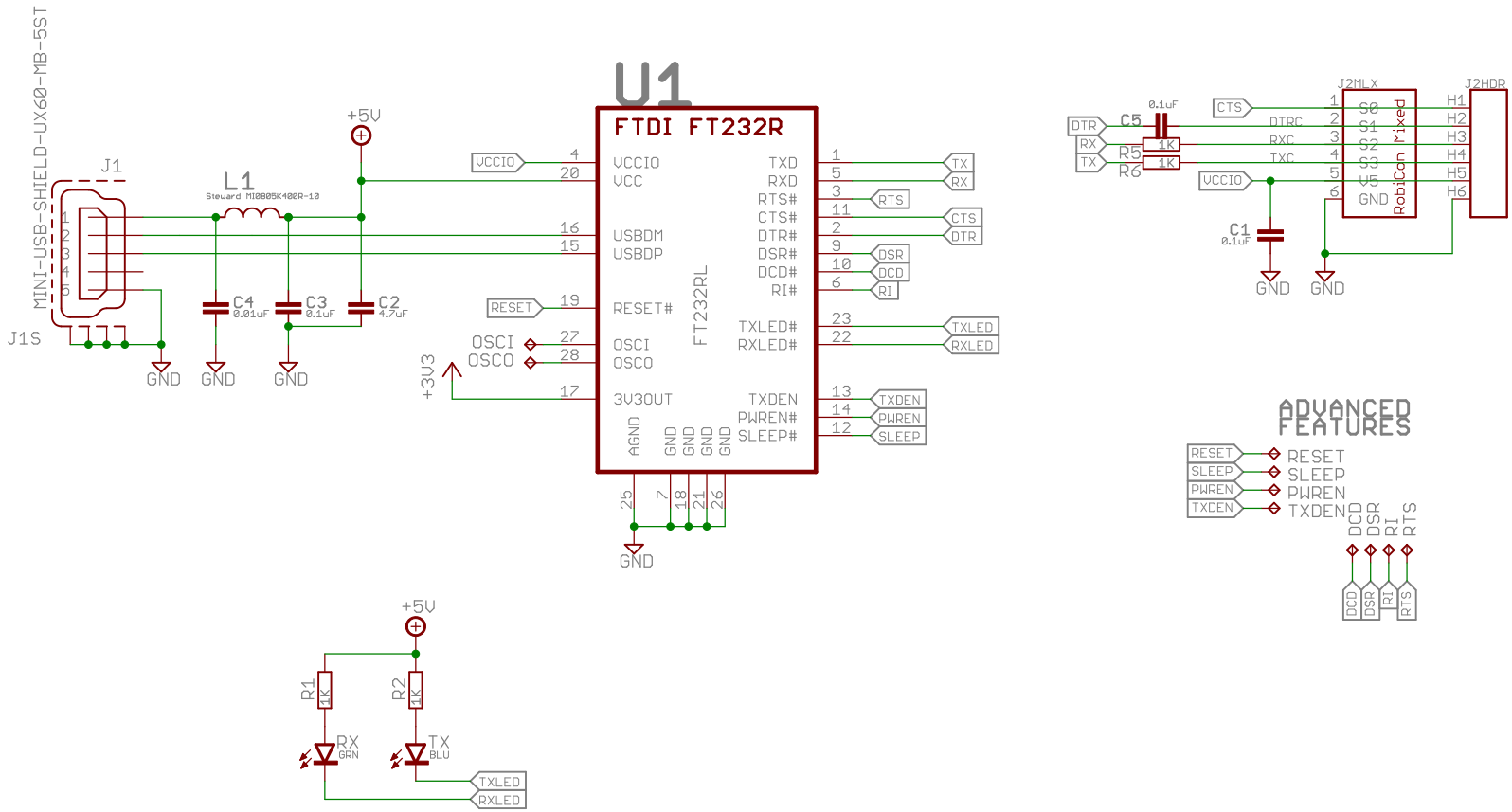

BRD1
RobiCon.org Compliant Board
BRD-B02-B

CircuitMonkey.com

TITLE: 0049 USB-Serial Adapter FT232R

Document Number: 410-0049-01 REV: A

Date: 7/16/10 3:00 PM Sheet: 1/1